Interactions between trade policies and GM food regulations

Kym Anderson

World Bank, University of Adelaide and CEPR

March 2005

Revision of a paper for the Conference on Economics of Regulation of Agricultural Biotechnologies, Arlington VA, 10-12 March 2004. The paper has benefited from the author's conversations with Julian Alston, Colin Carter, Phil Pardey and Brian Wright and from earlier joint work with Lee Ann Jackson, Chantal Pohl Nielsen and Sherman Robinson. The views are his own, however, and not necessarily those of his current employer. Thanks are due to the UK's Department for International Development for supporting the author's research on this topic at the World Bank. Forthcoming in *Regulating Agricultural Biotechnology: Economics and Policy*, edited by R.E. Just, J.M Alston, and D. Zilberman, New York: Springer, 2006.

Abstract

Agricultural biotechnologies, and especially transgenic crops, have the potential to offer higher incomes to biotech firms and farmers, and lower-priced and better quality food for consumers. However, the welfare effects of adoption of genetically modified (GM) food and feed crop varieties are being affected not only by some countries' strict regulations governing GM food production and consumption, but also by their choice of food trade policy instruments. Specifically, notwithstanding the ending of the European Union's GM moratorium in April 2004, the continuing use by the EU of strict labeling and liability laws and of variable trade taxes-cum-subsidies and tariff rate quotas is reducing the aggregate gains from new biotechnologies and the incentive for EU taxpayers and for life science companies to support GM food research. The use of variable levies and prohibitive out-of-quota MFN tariffs in particular is yet another reason to push for an ambitious outcome from the WTO's Doha round of agricultural trade negotiations.

Key words: Agricultural biotechnology, trade policy, regulation of GM foods.

Author's contact details:

Kym Anderson
Development Research Group
Mailstop MC3-303
World Bank
1818 H Street NW
Washington DC 20433 USA
Phone +1 202 473 3387
Fax +1 202 522 1159
kanderson@worldbank.org

Interactions between trade policies and GM food regulations

Kym Anderson

1. Introduction

There is a small but rich literature on the consequences of market distortions for the aggregate size and distribution of the benefits (positive and negative) from agricultural R&D. A neat synopsis of the key analyses and conclusions can be found in Alston and Pardey (1996, pp.184-98). A consensus in that literature is that the aggregate size of the benefits is likely to be far less affected by price-distorting policies than is their distribution. While this certainly is the case if distortion rates are not altered when new farm technologies appear, it turns out to be less so if those rates are endogenous to technological change at home or to terms of trade changes following adoption of new technology abroad. And despite the efforts of the Uruguay Round's agricultural and sanitary and phytosanitary agreements to discipline agricultural protection, much scope evidently remains for World Trade Organization (WTO) members to vary their price distortions. With respect to products that may contain genetically modified organisms (GMOs), one way this is being done is to limit imports produced with the new biotechnology (via bans or strict labeling regulations), on the grounds that they may harm the environment or be a risk to human health. Another is by having support measures that vary import tariff/export subsidy rates (or the extent of direct domestic producer price support) so as to

maintain a constant domestic price in the wake of new technology being adopted abroad or at home.

The emergence in the 1990s of transgenic crop varieties initially offered hope that the private sector might boost public funding of agricultural research. But concerns soon arose to dampen that optimism. A key one was that Europeans and others would reject the technology on environmental and food safety grounds, thereby thwarting export market prospects for adopters of the transgenic crops. That concern was vindicated when the European Union imposed in 1998 of a *de facto* moratorium on the production and importation of food products that may contain GMOs. As a result, widespread adoption of new food crop varieties from the fledgling Gene Revolution has been limited to date to just three products (maize, soybean and canola) in three countries: Argentina, Canada and the United States (James 2004). True, the EU replaced its moratorium on 1 May 2004 with new legislation, but it involves strict GM labeling regulations and liability laws that demand the implementation of expensive segregation and identity preservation systems that – especially for developing countries -- may be as restrictive of exports of GM products as was the moratorium. With a number of other countries also imposing strict labeling regulations on GM foods and no harmonization of those standards (Carter and Gruere 2005), biotech firms are increasingly diverting their R&D investments away from food. Many public agricultural research systems also have remained shy about investing heavily in this technology, including the CGIAR's international agricultural research centers which depend largely on rich-country grants. The legality of the EU's restrictions on imports of GM products has begun to be tested by the WTO's Dispute Settlement Body, but the issue will take years to resolve (Anderson and Jackson 2005c).

Varying import taxes/export subsidies/domestic price supports is legally possible under WTO law for any member while ever its applied tariff or producer or export subsidy is below the member's bound commitment for the product and measure in question. It also happens for a country automatically – and again without contravening WTO commitments – when the international price falls following adoption of new technology abroad and a tariff rate quota (TRQ) applies and is filled and the out-of-quota MFN tariff is prohibitive. Since TRQ are prevalent in the EU and more than 30 other countries, and there is a great deal of 'binding overhang' even in cases where MFN tariffs are not prohibitive, many WTO members still have scope to vary their agricultural protection rates. In the case of import tariffs, the bound rate for all agricultural products averages more than twice the applied rate for both developed and developing countries (Table 1). The binding overhang is even greater for the crop products of most relevance to the new agricultural biotechnologies, although somewhat less so for the European Union than for other developed countries (Table 2). It is TRQs plus this gap, together with a similarly large binding overhand in agricultural domestic support commitments, that has allowed the aggregate levels of producer subsidy equivalent estimates to remain almost as high today as they were when the Uruguay Round negotiations began in the latter 1980s (Figure 1). Nor is the Doha Development Agenda likely to lead to a rapid closing of that gap unless WTO trade negotiators become far more ambitious over the next year or two (Anderson and Martin 2005), so this prospect for variable protection rates will be with us for the foreseeable future.

This paper begins by using standard partial equilibrium theory to show the ways in which the adoption of GM crop varieties by some countries affects other countries in the absence of trade policy distortions, and then how those two types of

endogenous policy responses to the new biotechnology (a virtual import ban, or the maintenance of domestic prices via variable levies/subsidies or TRQs) can alter not just the distribution but also the aggregate size of the economic benefits from that R&D. It then draws on recent computable general equilibrium simulation analyses to show how important those possibilities may be empirically. The final section draws out some policy implications of the results, particularly for the Doha round of multilateral trade negotiations.

2. Simple economics of GM crop technology in a world with variable trade distortion

Leaving aside the biotechnology research industry, this section considers the market for a single crop such as maize for which a new variety is genetically engineered and made available in the form of purchasable seed by a biotech firm or public research institution. To set the scene, we first look at the effects in a small country of adoption of this cost-reducing technology at home or abroad in the absence of any trade policy responses. This is done both without and with an existing import tariff/export subsidy in place, to show the (un)importance of such measures on the results when the rate of protection is unchanged. The large-country case is then similarly considered, but in the case of adoption abroad we also explore the impact of it responding with either a variable levy to maintain the domestic price or a ban on imports from GM-adopting countries (or having a TRQ in place whose delivered protection rises when the international price falls). The final case analyses the effects on the international market, so as to be able to see also the impacts on GM-adopting and third countries.

2.1 Effects of GM adoption on a small country imposing an import tariff/export subsidy

Consider a small country importing this product but unable to influence its international price, P_w. The effects domestically of its GM adoption are shown in Figure 2, assuming that domestic consumers are indifferent to whether the product may contain GMOs (to be relaxed later). The cost-reducing technology causes a downward shift in the supply curve from S to S', which is assumed for convenience to be parallel. In the absence of trade policy distortions, this increases producer and national economic welfare by area abcd.

If there was a tariff in place that had raised the domestic price from P_w to P_t, GM adoption would raise producer welfare by area aefd (> area abcd), but decrease government tariff revenue by area efhg (= area bcfe), so national welfare would increase by only area abcd – the same as in the absence of the tariff.

Were producers supported even more by an export subsidy (and an accompanying tariff to prevent imports for subsidized re-export) that held the domestic price at P_s, producers would gain – and taxpayers would lose – even more than with just the lower tariff: the producer surplus following adoption would be raised by area ajkd (> area aefd) while government revenue would be lowered by the increase in the export subsidy payment of area jknm (= area bckj), so net national welfare is again increased by only area abcd in Figure 2.

Both cases provide the standard conclusion for a small country that an unchanged price-distorting policy alters the distribution of welfare but not the aggregate national welfare gain from a new farm technology. Presumably that protection policy thus raises the producers' demand for the new technology, while lowering the taxpayers'/finance ministry's incentive to subsidize such research.

What about the effect on this economy of GM adoption abroad? Adoption by enough producers to lower the international price from P_w to P_w' in Figure 3 would benefit this importing economy provided its tariff was not and did not remain prohibitive, but that gain is greater the smaller the tariff. With no tariff the gain in consumer welfare net of the loss to producers is area qbwx in Figure 3 – the maximum gain from improved terms of international trade. If instead a non-prohibitive specific tariff of P_t–P_w applied, the gain would be smaller but still positive, namely area yevu, following the international price fall. That is, even with an unchanged tariff, the importing country gains less from adoption abroad the larger is that tariff. And if that country chose to raise its tariff to offset the effect of the fall in P_w on the domestic price, then it would gain even less from GM adoption abroad – and nothing at all if the tariff increase fully offset the international price. The latter would also be the case if a tariff rate quota operated and the out-of-quota tariff was prohibitive and the quota itself was filled.

2.2 Effects of GM adoption on a large country imposing an import restriction

What about when the importing country is large enough to influence the international market for this product? The analysis of Figure 3 in the previous paragraph applies equally to the large importing country enjoying a terms of trade improvement from GM adoption abroad (where again its consumers are assumed for the moment to be indifferent to GM food), assuming no change in this country's tariff. The only difference is that P_w would have fallen less than in the small-country case following GM adoption abroad, because of the greater quantity demanded by this large country in the international market (to be shown later using Figure 4).

When the assumption of no trade policy response is relaxed, qualifications are again needed. For example, if the importing country's tariff is raised following the international price fall so as to keep the domestic price at P_t, or that is achieved by having a tariff rate quota that is filled and an out-of-quota tariff that is prohibitive, the national gain from GM adoption abroad again would be foregone. But unlike in the small country case, in this case the larger the importing country's imports prior to adoption abroad, the larger would be the fall in P_w with this variable levy response. That is, the variable levy not only eliminates the gain to that country from GM adoption abroad, but it also (a) reduces the gain from this new biotechnology to the adopting countries, and (b) raises the loss to all other countries that, as net exporters of the conventional (non-GM) variant of this product, suffer a terms of trade loss. The same would apply with a variable export subsidy.

Alternatively, if the importing country were to ban imports of this product from GM-adopting countries, that would push the domestic price above P_t' to a level that could be more or less than P_t, depending on how large the GM-adopters are in international markets. As shown in the next sub-section, this reduces the gain from this new biotechnology to the adopting countries but raises the loss to other countries exporting non-GM varieties of this crop.

Were this large importing country to allow GM adoption domestically, its supply curve would shift out from S to S' (again assumed for convenience to be a parallel shift) in Figure 3. In the presence of a zero or fixed import tariff this would depress the international price (for diagrammatic convenience to, say, P_w') following the decline in the country's import demand by quantity bw-rx (or ev-su in the case of a positive tariff). That would reduce the prospects of GM adopters abroad gaining and would lead to gains to domestic producers only if area daqr exceeds area qbP_wP_w' in

the case of no tariff (or if area adsy exceeds area yeP_tP_t' in the case of a positive tariff). However, if the tariff is raised after GM adoption so as to maintain the pre-adoption domestic price P_t, producer welfare in this country would unequivocally improve (by area daez) while that of overseas producers would be depressed by further downward pressure on P_w.

2.3 International market effects of sub-global GM adoption

Adoption of that new GM maize variety in some maize-exporting countries provides importing countries with the option of continuing to buy from those exporters a crop that now may contain GMOs, or buying a GM-free product from non-adopting countries. The former international market is shown in Figure 4(a), the latter in Figure 4(b), in both cases assuming no price-distorting policies are introduced. In Figure 4(a), ES_g and ED_g are the excess supply and excess demand curves for the GM-adopting countries' surplus prior to adoption; and in Figure 4(b), ES_n and ED_n are the excess supply and excess demand curves for the exporting countries choosing not to adopt GM varieties yet. Adoption of a GM variety by some producers in the first group of exporting countries is assumed to lower production costs there such that ES_g shifts down to ES_g'. If consumers in importing countries (as is assumed throughout to be the case in exporting countries) were indifferent about whether the crop may contain GMOs, ED_g would remain unchanged and the unit value of that bilateral trade would fall from b to e. Net economic welfare would increase in the importing countries by area bcfe (the gain to their consumers would exceed the loss to their domestic producers), while net economic welfare in the GM-

adopting countries would change by the area def minus area abc. A sufficient condition for that to be positive is that ES_g is parallel to ES_g'.[1]

What if some consumers in some of the importing countries consider the GM-free variety to be superior and therefore prefer it over supplies that may contain GMOs? That would cause the ED_g curve in Figure 4(a) to shift leftwards to ED_g'. It would depress the unit value of that bilateral trade even more, to g, and may even lead to the export volume being smaller than before adoption (if h is to the left of c). Consumers of the GM variety benefit even more from its low price, but producers in the adopting countries (who are assumed not to segregate GM and non-GM varieties) are more likely to be worse off.

How does all this affect the GM-free exporting countries? On the one hand, if consumers consider the GM and non-GM varieties as perfect substitutes, then the increased volume and lower price of exports from GM-adopting countries would shift ED_n to ED_n' in Figure 4(b), lowering export revenue and net economic welfare in non-adopting exporting countries where producer losses would exceed gains to consumers in those countries by area vwzy. On the other hand, if some consumers in some importing countries prefer the GM-free product, the leftward shift in ED_n would be smaller or that curve may even end up to the right rather than the left of its original position. If that substitution effect is strong enough to place ED_n' to the right of ED_n, producers in the GM-free exporting countries would be better rather than worse off

[1] If, however, that supply shift is wedge-shaped such that points a and d are closer together or coincide, we know from the theory of immizerizing growth (Bhagwati 1958) that the GM-adopting countries could be worse off if the excess demand curve they face is sufficiently inelastic. Lindner and Jarrett (1978) show that, even with a completely inelastic demand curve, a parallel shift (but not a pivotal shift) downwards in the supply curve will not reduce the exporting countries' surplus. Were the supply curve to shift downwards only to the left of point c in Figure 4(a) -- that is, if only lower-cost infra-marginal producers were able to adopt the new biotechnology -- all the benefits would stay with the GM-adopting producers (but be shared with the biotech firm that engineered that new GM variety, not modeled above) and none would be shared with consumers abroad or at home.

following GM adoption abroad, and conversely for consumers in those exporting countries.

Should some of the importing countries choose to ban imports of this product from countries adopting the GM variety (in the assumed absence of segregation and an identity preservation system), the leftward shift of ED_g in Figure 4(a) would be greater and that of ED_n in Figure 4(b) would be less (or be more likely to be a rightward shift). In this case the government's import ban is effectively forcing all of its consumers to buy only GM-free varieties, which makes them higher-priced, so consumer welfare in such importing countries – and producer welfare in GM-adopting countries – will be less than if consumers were free to choose whether to avoid imports that may contain GMOs.[2] However, producers in the countries imposing the ban, and in GM-free exporting countries, will be better off with such a ban in place than under free trade while ever they are denied the right to adopt the new technology. Hence it is an empirical question as to whether they would be better off in that situation or being able to adopt the technically more productive GM variety if the latter required (to avoid violating WTO national treatment rules) the removal of the GM import ban.

Were that import ban to be replaced by strict labelling and associated liability laws, as happened in the EU in April 2004, importers would be even less inclined to buy from GM-adopting countries -- including in cases where the GM crop varieties grown there had been approved by the EU prior to 1998 (as with some GM soybean varieties) – because of the now-higher costs of compliance with the new labelling laws that require segregation and identity preservation back down the value chain to

[2] The presumption here is that the deadweight welfare cost of segregation and identity preservation through the value chain is modest, as it seems to be for segregating different qualities of each traditional grain at present. For a model in which such costs are non-trivial and so the welfare costs are less clear, see Moschini and Lapan (2005).

the farmer. The more GM-adopting countries there are that cannot provide credible certification to importers, the larger would be the further leftward shift in the ED_g curve in Figure 4(a).

It is clear from the above sample of situations that not even some of the signs, let alone the sizes, of the welfare effects of GM adoption by a sub-set of countries can be determined a priori when there are trade policy responses by other countries. Hence the need for quantitative analysis of global markets for the relevant products. Such analysis needs to go beyond the above one-crop model so as also to take account of products that are close substitutes or complements in production and/or consumption or are inputs into other activities. Of particular importance in this case is the livestock sector, since maize and soybean (the first two GM food crops developed) are major inputs into the intensive segment of livestock production but not the extensive segment that still relies on grazing pastures. The most comprehensive way to meet these needs is to use a global economy-wide model of trading nations.

3. Empirical estimates of the effects of GM adoption and trade policy responses

Estimating the welfare consequences of actual and prospective GM crop adoption by some countries and of policy responses by others has been the focus of numerous recent studies. Here there is room only to provide summaries of three sets of simulation results that pertain specifically to the analytical issues raised in the previous section. All employ the same well-received CGE model of the world economy known as GTAP (described in Hertel 1997). The first set assumes the world's price-distorting trade policies are all non-varying exogenous taxes/subsidies,

apart from the EU imposing a ban on imports from GM-adopting countries of products that may contain GMOs. The second set specifically examines the impact of the EU's existing trade taxes/subsidies on the size of the estimated welfare effects of GM adoption abroad without versus with a ban on imports from GM-adopting countries. By way of contrast, the third set assumes the EU's Common Agricultural Policy insulates domestic producers somewhat from the fall in international prices that follows the adoption of GM crop varieties abroad.

3.1 Effects of sub-global GM adoption without and with the EU moratorium

A recent study by Anderson and Jackson (2005a) begins with GM adoption for just coarse grains and oilseeds but then adds rice and wheat, to get a feel for the relative economic importance to different regions and the world as a whole of current versus prospective GM crop technologies. That study modified the GTAP model (with its Version 5 database) so it could capture the effects of productivity increases of GM crops, some consumer aversion to products containing GMOs, and substitutability between GM and non-GM crop varieties as intermediate inputs into final consumable food. The impacts of GM adoption by just the US, Canada and Argentina are considered first, without and then with an import ban by the EU. The EU is then added to the list of adopters to explore the tradeoffs for the EU between productivity growth via GM adoption and the non-pecuniary benefits of remaining GM-free given the prior move to adopt in the Americas. A change of policy in the EU to allow the adoption and sale of GM crop products would reduce the reticence of the rest of the world to adopt GM crop varieties, so the effects of all other countries then adopting is explored as well.

Specifically, the base case in the GTAP model, which is calibrated to 1997 just prior to the EU moratorium being imposed, is compared with an alternative set of simulations whereby the effects of adoption of currently available GM varieties of maize, soybean and canola by the first adopters (Argentina, Canada and the US) is explored without and then with the EU *de facto* moratorium on GMOs in place.[3] Plausible assumptions about the farm productivity effects of these new varieties and the likely percentage of each crop area that converts to GM varieties are taken from the latest literature including Marra, Pardey and Alston (2002), Qaim and Zilberman (2003) and Huang et al. (2004).

The global benefits of GM adoption by the US, Canada and Argentina is estimated to be US$2.3 billion per year net of the gains to the biotech firms (which are ignored in all that follows) if there were no adverse reactions elsewhere. About one-quarter of that is shared with the major importing regions of the EU and Northeast Asia, 60 percent goes to the three GM-adopting countries, and Brazil, Australia, New Zealand and Sub-Saharan Africa other than South Africa lose very slightly because of an adverse change in their terms of trade. But when account is taken of the EU moratorium, which is similar to an increase in farm protection there, the gain to the three GM-adopting countries is reduced by one-third. The diversion of their exports to other countries lowers international prices so welfare for the food-importing regions of the rest of the world improves – but only very slightly. Meanwhile the EU is worse off by $3.1 billion per year minus whatever value EU consumers place on having avoided consuming GMOs. If the EU instead were to allow adoption and importation of GM varieties, it would benefit because of its own productivity gains and so too would net importers of these products elsewhere in the world, while countries that are

[3] This has to be done in a slightly inflating way in that the GTAP model is not disaggregated below 'coarse grains' and 'oilseeds'. However, in the current adopting countries (Argentina, Canada and the US), maize, soybean and canola *are* the dominant coarse grains and oilseed crops.

net exporters of coarse grains and oilseeds (both GM adopters and non-adopters) would be slightly worse off (only slightly because coarse grains and oilseeds are minor crops in the EU compared with North America).

However, if by adopting that opposite stance in the EU the rest of the world also became uninhibited about adopting GM varieties of these crops, global welfare would increase by nearly twice as much as it would when just North America and Argentina adopt, and almost all of the extra global gains would be enjoyed by developing countries. If one believes the EU's policy stance is determining the rest of the world's reluctance to adopt GM varieties of these crops, then the cost of the EU's moratorium to people outside the EU15 has been up to $0.4 billion per year for the three GM-adopting countries and $1.1 billion per year for other developing countries.

On the one hand, those estimates overstate the global welfare cost of the EU moratorium to the extent that without it, the EU would have used its variable import levy capability (or TRQ) to reduce/stop any decline in EU domestic prices for these products (see sub-section 3.3 below). But on the other hand, the above estimates understate the global welfare cost of the EU's moratorium in at least three respects. First, the fact that the EU's stance has induced some other countries to also impose similar moratoria has not been taken into account.[4] Second, these are comparative static simulations that ignore that fact that GM food R&D is on-going and that investment in this area has been reduced considerably because of the EU's extreme policy stance as biotech firms redirect their investments towards pharmaceuticals and industrial crops instead of food crops. And third, the above results refer to GM adoption just of coarse grains and oilseeds. The world's other two major food crops

[4] Sri Lanka was perhaps the first developing country to ban the production and importation of GM foods. In 2001 China did the same (with some relaxation in 2002), having been denied access to the EU for some soy sauce exports because they may have been produced using GM soybeans imported by China from the US.

are rice and wheat, for which GM varieties have been developed and are close to being ready for commercial release.

How have EU farm households been affected by the EU moratorium? The above simulation study finds that their real incomes are somewhat higher with the EU moratorium than they would be if there was no moratorium and they were allowed to adopt GM varieties of maize, soybean and canola (and the EU did not use its variable levy capability or TRQs to prevent domestic prices of these products from falling). This is because the price decline for those products would more than fully offset the productivity gain from adopting GM varieties. It is therefore not surprising that EU farmers were not lobbying for a pro-GM policy stance.

A second set of simulations from the Anderson and Jackson (2005a) study involves a repeat of the first set except that China and India are assumed to join America in adopting existing GM crop varieties, and GM rice and wheat varieties are assumed to be made available to the GM adopting countries' farmers, again without and then with an EU import moratorium. In this case it is simply assumed that total factor productivity in GM rice and wheat production would be 5 percent greater than with current non-GM varieties. If China were to decide to approve the release of GM rice and wheat varieties, India would probably follow soon after. China and India account for 55 per cent of the world's rice market and 30 per cent of the wheat market, being close to self sufficient in both. They therefore do not have to worry greatly about market access abroad. If that led to enough other non-EU countries accepting GM varieties of rice and wheat, this could well lead North American and Argentina also to adopt them.

Allowing China and India to join the GM-adopters' group, and adding rice and wheat to coarse grain and oilseeds, almost doubles the potential global gains from this

biotechnology. The global economic welfare gain if there were no moratoria by the EU or others is estimated to be $3.9 billion with just rice added, or $4.3 billion if wheat is also added, instead of the $2.3 billion per year when just the original three countries and commodities are involved. North America gains only a little more from the addition of GM rice and wheat, which might seem surprising given the importance to it of wheat, but it is because its productivity gain is almost offset by a worsening of its terms of trade as a consequence of their and the other adopters' additional productivity. Two-thirds of the extra $2.0 billion per year from adding rice and wheat would accrue to China and India, with other developing countries, as a net grain-importing group, enjoying most of the residual via lower-priced imports. When the EU moratorium is in place, the cost to the EU of its moratorium would rise from $3.4 to $5.5 billion per year (again not counting the benefit to EU consumers of knowing they are not consuming GMOs), while for the rest of the world (again assuming the EU policy is discouraging GM adoption elsewhere) it rises from $1.5 billion to $2.9 billion per year. The adding of further crops to the GM family would continue to multiply that latter estimate.[5]

3.2 How much do the estimated welfare effects of the EU moratorium in response to GM adoption abroad depend on the EU's existing trade policy distortions?

To test the proposition in Section 2 above that at least the net welfare effects of technology adoption are not affected greatly by existing trade policies, Anderson and Nielsen (2004) conduct a similar set of experiments to the one above (but with the earlier Version 4 of the GTAP model and database). Their study also is simpler in that it assumes all of each crop in adopting countries uses GM varieties, in contrast to the

[5] For a closely related study that focuses on what the EU moratorium means for Africa, see Anderson and Jackson (2005b).

above study which assumes only a subset of the crop (the percentage varying by country) is planted to GM varieties in adopting countries. In that respect it overstates the likely gains from adoption. But it understates the cost of the EU moratorium in the sense that it compares that scenario with one in which the EU simply enjoys the terms of trade improvement, rather than also adopting GM technology domestically (as assumed in the above Anderson and Jackson (2005a) study). These differences are unimportant for the present purpose though, which is to ask how different are the estimates of the effect of the EU moratorium if Western Europe's agricultural protectionism was not there (and hence its farm sector was considerably smaller and its market more import-dependent).

The Anderson and Nielsen simulations were run first with 1997 farm policies in place and then without any agricultural protectionism in Western Europe, so as to get two different base cases to compare with the alternative of the EU moratorium being imposed. The results suggest that, without those protectionist policies, an EU import ban would cost the EU only $0.4 billion per year less than it has with those policies in place. This is consistent with the expectation, from the theory in Alston, Edwards and Freebairn (1988) and Alston and Pardey (1996) and from Figure 3 above, of the aggregate domestic effect even for a large economy being only slightly smaller in the presence of protectionist policies. However, without that protectionism the EU moratorium would have hurt GM-adopting countries by an estimated $1.05 billion per year less, and would have helped non-adopters outside the EU by $2.8 billion less. Those signs are as predicted from Figure 4.

3.3 How much difference does it make if the EU simply maintains domestic prices with a variable levy or TRQ?

To address the question of how much bias is introduced if the reality of the EU's variable levy policy and TRQs is ignored, van Meijl and van Tongeren (2004) use the GTAP model with the Version 5 database to do a similar but slightly more complicated analysis than that of Anderson and Nielsen. Variable import levies and variable export subsidies are allowed for cereals, and they are triggered by an endogenous price transmission equation involving the EU's grain trade position.[6] That is, the domestic price is not kept completely constant, but its downward movement is heavily constrained. As a result, the EU is shielded from the international price falls following GM adoption abroad.

They estimate that this price-insulation mechanism halves the welfare gains that the EU would otherwise enjoy from a terms of trade improvement following the productivity gains from GM adoption abroad, while reducing the welfare of North American adopters (who have to find markets elsewhere for their exports) – although only very slightly, and much less so than when an EU ban is imposed. These results are thus consistent with the finding in Section 2 above. They imply empirical studies that do not incorporate the EU's variable levy and TRQ policies may overstate only slightly the cost to GM adopters of EU discrimination against GM-adopting suppliers, but may overstate somewhat more the cost to the EU itself (depending on the extent to which the EU would have reduced the decline in domestic prices of these products). This problem of overstatement may be greater in the case of other countries with larger tariff binding overhangs, should they also be using such variable levy schemes or have TRQs also on oilseeds.

[6] The EU's oilseed levies are not varied because they have been bound in the GATT/WTO at zero (see Table 2). It is the tariff/export subsidy not only on maize but also on other cereals that is endogenously adjusted when international prices for all these substitute products change.

4. Policy implications

Clearly, the welfare effects of adoption of genetically modified (GM) food and feed crop varieties are being affected not only by some countries' strict regulations governing GM food production and consumption, but also by their exogenous and endogenous choices of food trade policy instruments. Most notable have been the bans on imports of food products that may contain GMOs, particularly by the EU. Even with the ending of the European Union's GM moratorium in April 2004, the EU regulations replacing it – and those of numerous other countries – demand costly segregation and identity preservation systems that may be just as restrictive as a ban on exports from GM-adopting regions (especially developing countries). Indeed they may be even more restrictive than was the moratorium, because at least the latter allowed approved GM varieties to be shipped without being subject to such strict labelling and liability laws. WTO dispute settlement procedures provide an avenue to try to reduce these barriers, but no quick and easy resolution is expected (Anderson and Jackson 2005c).

Meanwhile, variable trade taxes-cum-subsidies by the EU and others will continue to reduce the aggregate gains from new biotechnologies and the incentive for EU taxpayers and life science companies to support GM food research. Because the EU – like many other countries – has WTO-bound tariffs well above applied rates, its use of variable levies is not inconsistent with its WTO obligations. Nor is its TRQ regime. Moreover, the July 2004 Framework agreement for the WTO's current Doha round of negotiations (WTO 2004) includes provision for a special safeguard mechanism which could allow developing countries even more scope to use variable levies, as suggested for example by Foster and Valdes (2005). The theory and results

presented above show that using such a capability to insulate an economy from the international price-reducing effects of biotechnology adoption abroad will reduce the welfare gains from that new technology (a) for adopters abroad and (b) for consumers in the insulating countries. They also dampen the incentive for biotech research providers to invest in GM food crops. Given the persistently high rates of return to agricultural R&D (Alston et al. 2000), this is yet another reason, on top of the standard ones,[7] as to why it is important to seek major reductions in bound agricultural tariffs in the present Doha round of multilateral trade negotiations.

References

Alston, J.M., G.W. Edwards and J.W. Freebairn (1988), 'Market Distortions and Benefits from Research', *American Journal of Agricultural Economics* 70(2): 281-88, May.

Alston, J.M. and P.G. Pardey (1996), *Making Science Pay: The Economics of Agricultural R&D Policy*, Washington DC: AEI Press.

Alston, J.M., M.C. Marra, P.G. Pardey and T.J. Wyatt (2000), *A Meta Analysis of Rates of Return to Agricultural R&D: Ex Pede Herculum?*, IFPRI Research Report No. 113, Washington DC: International Food Policy Research Institute.

Anderson, K. and L.A. Jackson (2005a), 'Standards, Trade and Protection: The Case of GMOs', paper prepared for the 41st Panel Meeting of *Economic Policy* in Luxembourg, 15-16 April.

[7] See, for example, Anderson and Martin (2005).

Anderson, K. and L.A. Jackson (2005b), 'Some Implications of GM Food Technology Policies for Sub-Saharan Africa', *Journal of African Economies* 14(3): 385-410, September.

Anderson, K. and L.A. Jackson (2005c), 'What's Behind GMO Disputes?' *World Trade Review* 4(2): 203-28, July.

Anderson, K. and W. Martin (2005), 'Agricultural Trade Reform and the Doha Development Agenda', *The World Economy* 28(9): 1301-27, September.

Anderson, K. and C.P. Nielsen (2004), 'Economic Effects of Agricultural Biotechnology Research in the Presence of Price-Distorting Policies', *Journal of Economic Integration* 19(2): 374-94, June.

Bhagwati, J.N. (1958), 'Immizerizing Growth: A Geometric Note', *Review of Economic Studies* 25: 201-05, June.

Carter, C.A. and G.P. Gruere (2005), 'International Approval and Labeling Regulations of Genetically Modified Food in Major Trading Countries', paper presented at the Conference on Economics of Regulation of Agricultural Biotechnologies, Arlington VA, 10-12 March.

Foster, W. and A. Valdes (2005), 'Variable Tariffs as Special Safeguards: The Merits of a Price Floor Mechanism Under Doha for Developing Countries', paper presented at the Workshop on Managing Food Price Risks and Instability, World Bank, Washington DC, 28 Feb-1 March.

Hertel, T.W. (1997) (ed.), *Global Trade Analysis: Modeling and Applications*, Cambridge and New York: Cambridge University Press.

Huang, J., R. Hu, H. van Meijl and F. van Tongeren (2004), 'Biotechnology Boosts to Crop Productivity in China: Trade and Welfare Implications,' *Journal of Development Economics* 75(1): 27-54, October.

James, C. (2004), *Global Review of Commercialized Transgenic Crops: 2003*, International Service for the Acquisition of Agri-biotech Applications, Ithaca NY.

Jean, S., D. Laborde and W. Martin (2006), 'Consequences of Alternative Formulas for Agricultural Tariff Cuts', in *Agricultural Trade Reform and the Doha Development Agenda*, edited by K. Anderson and W. Martin, London: Palgrave Macmillan and Washington DC: World Bank .

Lindner, R.J. and F.G. Jarrett (1978), 'Supply Shifts and the Size of Research Benefits', *American Journal of Agricultural Economics* 60(1): 48-58, February.

Marra, M., P. Pardey and J. Alston (2002), 'The Payoffs to Agricultural Biotechnology: An Assessment of the Evidence', *AgBioForum* 5(2): 43-50. Downloadable at http://www.agbioforum.org/v5n2/v5n2a02-marra.pdf

Martin, W. and Z. Wang (2004), 'The Landscape of World Agricultural Protection', mimeo, World Bank, Washington DC, May.

van Meijl, H. and F. van Tongeren (2004), 'International Diffusion of Gains from Biotechnology and the European Union's Common Agricultural Policy,' *Agricultural Economics* 31(2): 307-16.

Moschini, G. and H. Lapan (2005), 'Labeling regulations and Segregation of First- and Second-Generation GM Products: Innovation Incentives and Welfare Effects', paper presented at the Conference on Economics of Regulation of Agricultural Biotechnologies, Arlington VA, 10-12 March.

Qaim, M. and D. Zilberman (2003), 'Yield Effects of Genetically Modified Crops in Developing Countries', *Science* 299: 900-02.

WTO (2004), 'Decision Adopted by the General Council on 1 August 2004', WT/L/579, Geneva: World Trade Organization, 2 August (The July Framework Agreement).

Figure 1: Agricultural producer support in high-income countries, by country, 1986-88 and 2001-03

(percentage of total farm receipts from support policy measures)

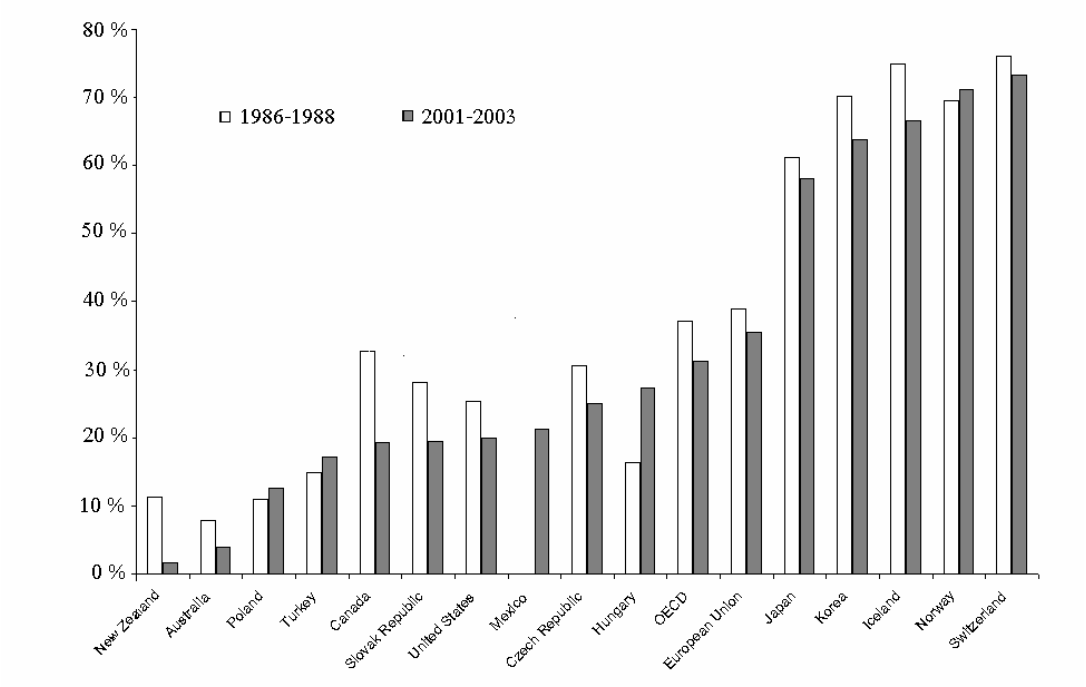

[1] Czech Republic, Hungary, Poland and the Slovac Republic data are for 1991-93 in the first period.

[2] Austria, Finland and Sweden are included in the OECD average for both periods but also in the EU average for the latter period.

Source: PSE estimates from the OECD's database (see www.oecd.org).

Figure 2: Effects of GM crop adoption at home by a small distorted economy

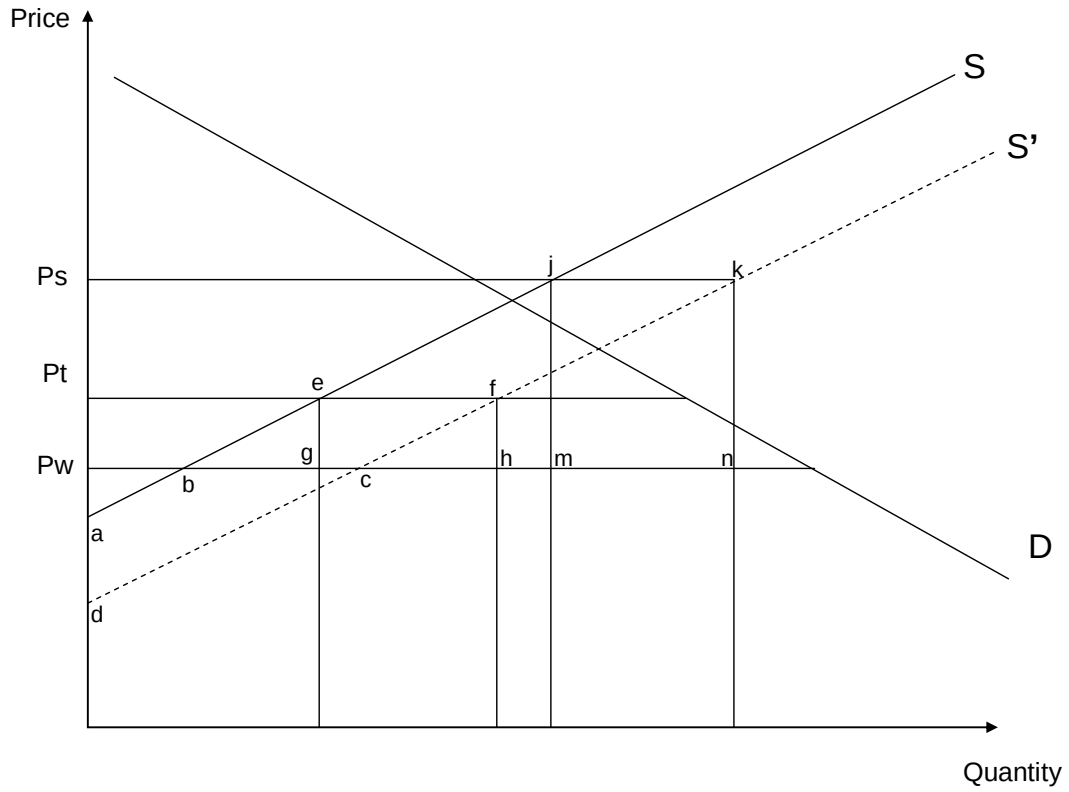

Figure 3: Effects of GM crop adoption abroad or at home for a distorted economy

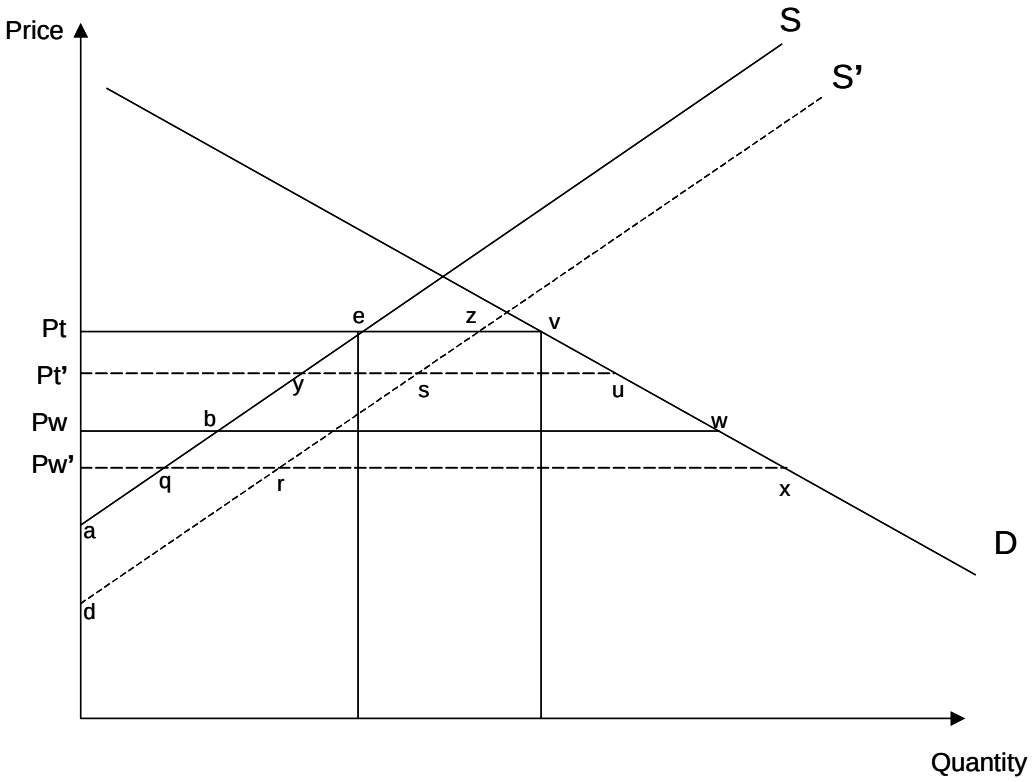

Figure 4: Effects of GM crop adoption by some exporting

(a) International market for varieties that may contain GMOs

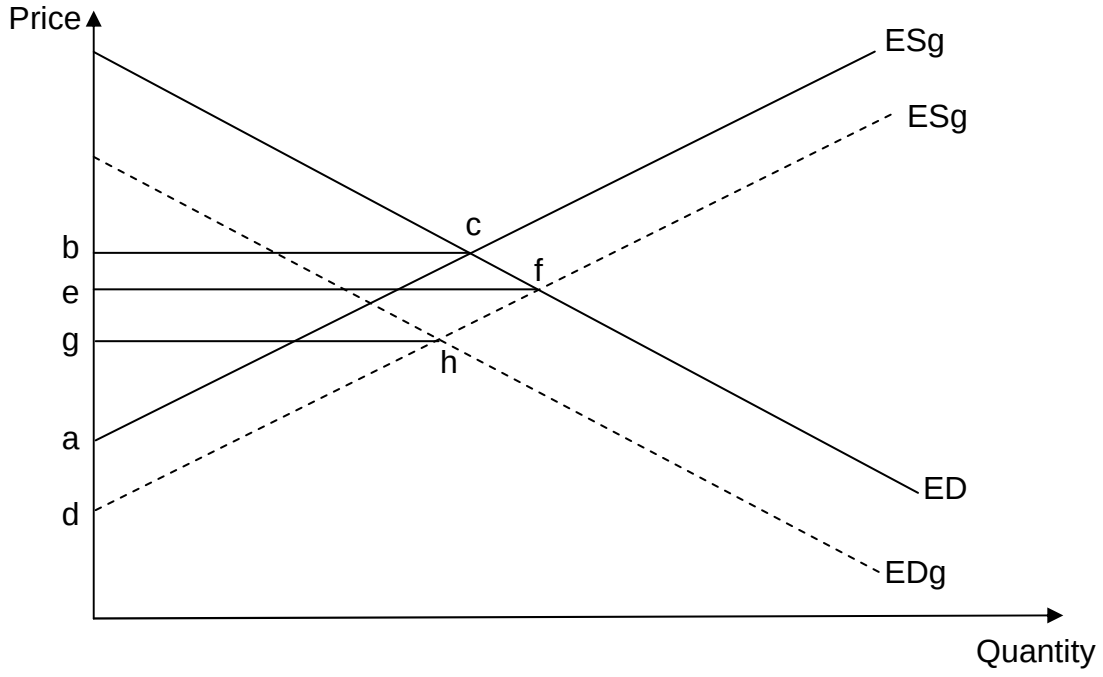

(b) International market for varieties that do not contain GMOs

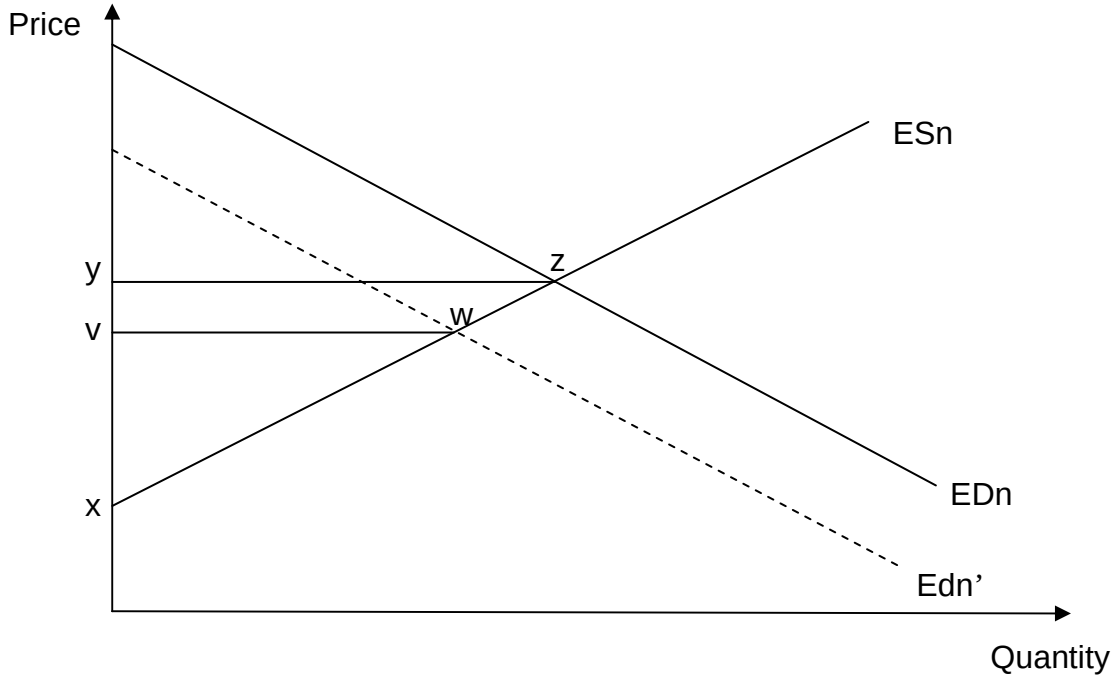

Table 1: Agricultural weighted average import tariffs, by region, 2001

(percent, *ad valorem* equivalent, weights based on imports)

	Bound tariff	MFN applied tariff	Actual applied tariff[a]
Developed countries	27	22	14
Developing countries	48	27	21
of which: LDCs	*78*	*14*	*13*
WORLD	37	24	17

[a] Includes preferences and in-quota TRQ rates where relevant, as well as the ad valorem equivalent of specific tariffs. Developed countries include Europe's transition economies that joined the EU in April 2004. The 'developing countries' definition used here is that adopted by the WTO and so includes East Asia's four newly industrialized tiger economies, which is why the 21 percent shown in column 3 is above the 18 and 14 percent shown in the first column of Table 1.

Source: Jean, Laborde and Martin (2005).

Table 2: Weighted average import tariffs, EU and all developed countries, selected crop products, 2001

(percent, *ad valorem* equivalent, weights based on imports)

	European Union		All developed countries	
	Bound tariff	MFN applied tariff[a]	Bound tariff	MFN applied tariff[a]
Maize	69	51	138	53
Oilseeds	0	0	27	9
Wheat	62	58	119	36
Rice	106	87	241	25
Other cereals	70	69	66	16

[a] When account is taken for in-quota tariffs of items subject to tariff rate quotas, and non-reciprocal preferences to developing countries, the actual applied tariff averages are even lower, as indicated in Table 1.

Source: Martin and Wang (2004).